Functions

- Counting
- Denomination
- Issue Splitting
- Multi-currency
- Authentication
- Facing and Orientation
- Serial Number Capturing
- Fitness Sorting: Soil, Holes, Tears, Tape, etc.

Marketing Network

Our products are sold to 59 countries and regions in the world.
We have branches in Europe, South Africa and India.

Julong set up 300 sales and service offices in China

Julong Co., Ltd.
No.308,Mid Qianshan Road,Anshan, Liaoning, China
Julong Co., Ltd. R&D Center and Manufacturing Base
Tel: +86-0412-5215081
Email: marketing@julong.cc
Copyright © Julong Co., Ltd. All Rights Reserved.
The information contained in this document is for reference purpose only, and is subject to change according to specific customer requirements and conditions.

Julong is a leading global provider of cash security operating and digital management solutions. As the first public company in the industry, Julong is committed to providing innovative and customized products, services and solutions to create long-term value and growth potential for its customers.
For more information, please visit
http:www.julong-global.com **http:www.julong.cc**

JL305 Series

Banknote Sorting Machine

Faster Counting, Safer Moving,
Better Circulation

JL305 Series
Banknote Sorting Machine

JL305 series offers an unprecedented level of accuracy, security and continuous processing of large volumes of banknotes. JL305 series is approved by European Central Bank (ECB).

Product Highlight

Stackers push-out banknote automatically when banknote quantity reach preset batch value, which improves sorting productivity with 50%. This technology with patent certification to ensure “Non-Stop Operation”.

Linear and roller banknote transport structure with patent certification and fully open banknote transport passage, which can be used to deal with damaged, old and small denomination banknote. It makes an easy maintenance and a quick jam recovery.

Modularization multi-sensor recognition technology helps to identify high quality counterfeit banknote and forgery banknote with high-precision.

Serial number identification and tracking are available and cash circulation management system is optional.

The LAN, RS-232 and USB interface extend the connectivity of JL305, which can be connected with external LCD, printer and PC for sorting report checking, printing and upgrading, to realize centralized management.

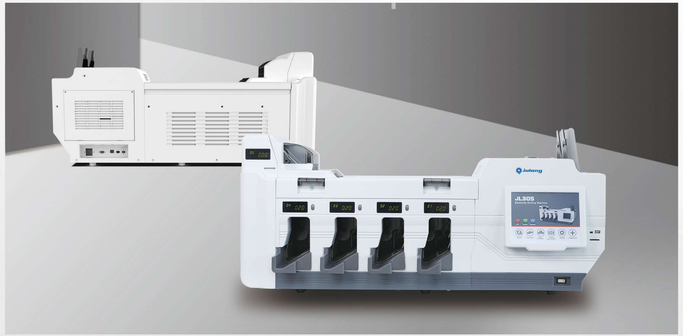

Four Configurations Available

The JL305 series offers 4 configurations to suit banknote processing requirement.

JL305-42

Stackers: 200 notes × 4 Stackers
Reject Stackers: 100 notes × 2 Stackers
Dimensions: 1074mm (W) × 445mm (D) × 470mm (H)
Weight: 70kg

JL305-62

Stackers: 200 notes × 6 Stackers
Reject Stackers: 100 notes × 2 Stackers
Dimensions:1345mm (W) × 445mm (D) × 470mm (H)
Weight: 88kg

JL305-82

Stackers: 200 notes × 8 Stackers
Reject Stackers: 100 notes x 2 Stackers
Dimensions: 1590mm (W) × 445mm (D) × 470mm (H)
Weight: 104kg

JL305-102

Stackers: 200 notes × 10 Stackers
Reject Stackers: 100 notes × 2 Stackers
Dimensions: 1800mm (W) × 445mm (D) × 470mm (H)
Weight: 122kg

Software System

LINUX operation system makes JL305 became extensible and configurable. Printer and computer can be connected to our sorting machine with a cable. Users are able to read, upload, print operator number, working time and banknote information, and also can save the information needed to computer. With our software, JL305 is capable of serial number reading, recognition and comparison, black list setting, counterfeit currency tracing and management, and bar code reading.

Technical Information

Capacity	Hopper: 1000 notes	**Operating System**	LINUX
NV Technology	CIS, UV, Magnetic, IR	**Certification**	CQC CB RoHS WEEE CE ECB
Speed Range	Counting: 1000 notes/min Sorting: 900 notes/min S/N Reading: 900 notes/min	**Support Currencies**	CNY EUR USD INR ZAR SAR AED GBP TZS PLN GHC GMD BUK JPY HKD GHF CAD KRW THB ALL NOK SEK AUD IRR SYP
Banknote Size Range	Width: 53-85 mm, Length: 115-180 mm	**Accessories**	Additional Currencies, Remote Display, Integral Printer, Clearance Program, Serial Number Printing.
Display	9.7″ TFI Color Display		
Interface	LAN, RS232, USB		
Power Supply	200-240V 50/60 Hz	**Power Consumption**	440W
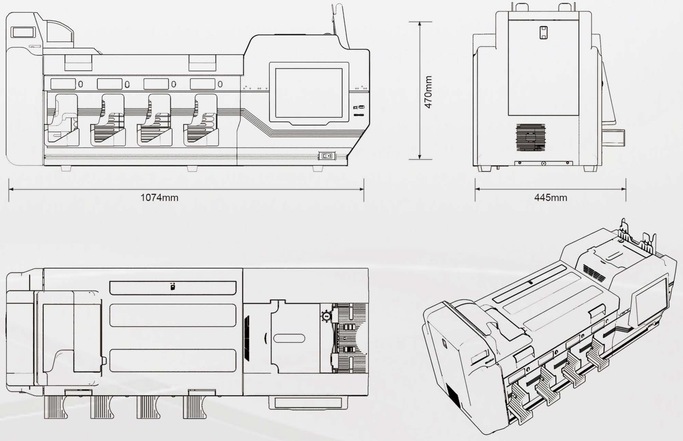
JL305-42 Dimensions